"Base" Capacity: 41/Lift
Actual Capacity:
19 Passengers
2 Wheelchairs

BODY PLAN

WHEELBASE 193"

PB10500, 22 FT. 11 IN., CAP 21, SEAT SIZE VARIES, SEAT SPACING VARIES, LIFT-REAR, 2-WC

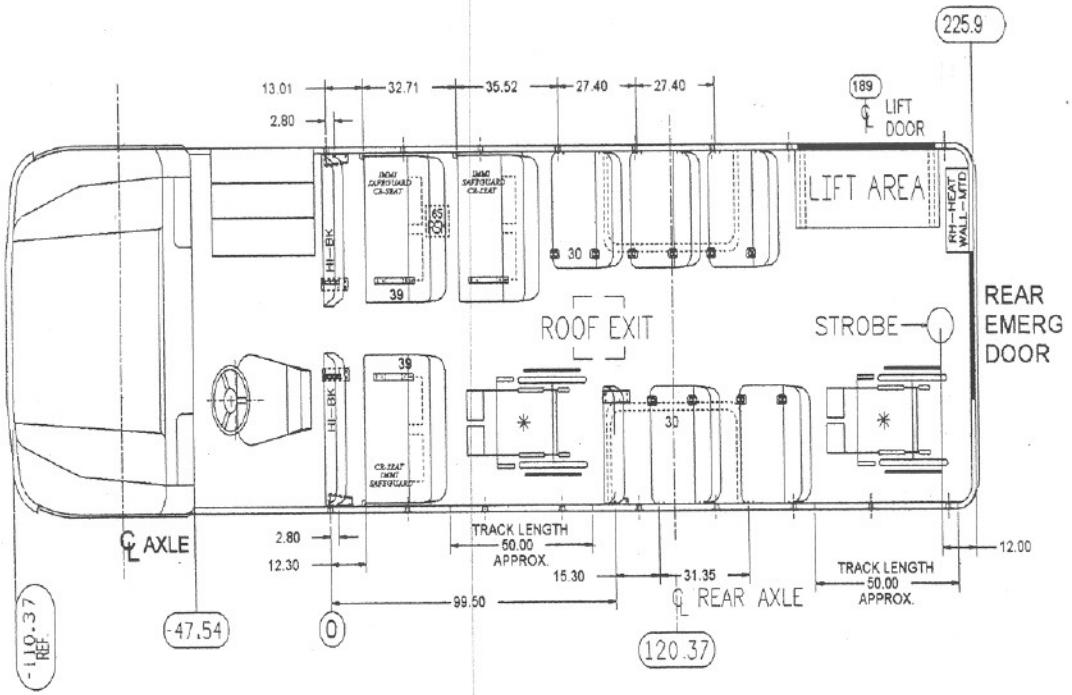

PURCHASED SEATS IN THIS UNIT ARE:
IMMI SAFEGUARD CHILD RESTRAINT

✳ 100":TOTAL TRACK LENGTH (APPROXIMATELY)

* NOTE:
IT IS THE SELLING DEALER'S RESPONSIBILITY TO ENSURE THAT ANY WHEELCHAIR TIE - DOWN SYSTEM SPECIFIED AND DEPICTED ON THIS DRAWING MEETS ALL DESTINATION STATE SPECIFICATIONS AND TO ALSO ENSURE THAT THE WHEELCHAIRS CAN BE PLACED AND REMOVED WITH RESPECT TO: SEATS, K/O's, SIDE EMERG DOORS, HEATERS, LIFTS, WHEELHOUSES, ETC..
POSSESSION OF THIS PRINT DOES NOT IN ANY WAY OBLIGATE IC CORP. TO BUILD THE UNIT SHOWN.
WC TRACK SHOWN IS FOR REFERENCE ONLY.

THIS UNIT CONFORMS TO APPLICABLE FMVSS

THIS DOCUMENT IS BLUEPRINT INFORMATION PROPRIETARY TO IC CORP. AND IS PROVIDED BY THAT INTERNATIONAL TRADE CONTROLS AND REGULATIONS

50000/49000

INTERNATIONAL TRUCK AND ENGINE CORPORATION
INTERNATIONAL CONFIDENTIAL PROPRIETARY

REVISE ONLY ON LASER SYSTEM

REFERENCE
LINEAR MEASURE: mm ☐ in ☒
APPROX. MASS (WEIGHT): ROUGH PART / FINISH PART
ONE PLACE (.X) ±0.5 ±.06
TWO PLACE (.XX) ±0.8 ±.03
THREE PLACE (.XXX) ±0.25 ±.010
ANGLES ±1°
DATE WHICH PROJECTION
INTERNAL CONTROL
NAME: BODY PLAN PB10500
SIZE: E 50
WHE TRANSLATION
WEIGHT: E
DRAWN: U00N327
DATE: 22OCT07
MATERIAL
APPROVED
DATE
CHECKED
DATE
APPROVED
FINE ROUGH DIES
FAST TYPE DIES
SCALE NONE
SIZE 4
DATE
PART NO.
SHEET 01
RELEASE NO.
WHITE-23B
FINISH

8	7	6	5	4	3	2	1